The Unique Solution

by the Editor

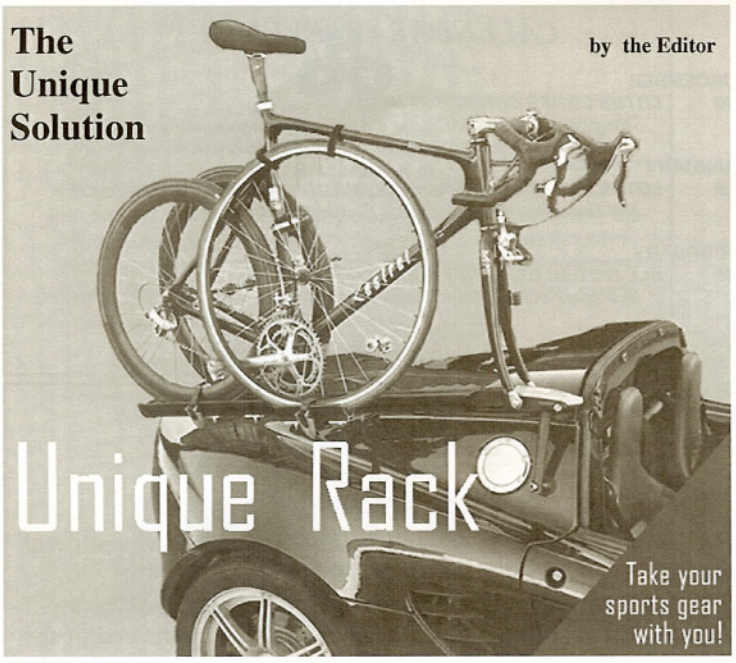

In addition to being an avid bicycle competitor, Lotus Corps member Terry Clark is also a long time car enthusiast. So when he got bored driving everyday cars while hauling his bike to triathalons, cyclocross, and bicycle road racing events, he started looking for something more sporty. After looking at number of other cars, including the Miata and Honda S2000, he chose to buy a Lotus Elise. The Elise had the performance he was looking for, so he took delivery of a black Elise from Fox Valley Motorcars in mid-December. However, finding the means to transport his bicycle with his new speedster was rather much more difficult.

Terry searched extensively for a bicycle rack which would be suitable to mount on his Elise. He looked at all of the various bike rack manufacturers and made numerous phone calls to the Lotus factory, but was told that the fiberglass bodywork and removable top would not handle the strain of any of the commercially available racks. In fact, the factory had once offered an optional bike rack for the Series 1 Elise, but quickly scrapped it as it had a tendency to rip right off the car at speed. Mounting a trailer hitch style receiver to the aluminum frame was also greatly discouraged by the factory.

After months of searching for a suitable rack, Terry met David Cooper who is a fellow cyclist and vintage auto racer. David is President of Cooper Technica in Chicago, which specializes in the restoration and customization of vintage European automobiles. Together, Terry and David brainstormed the problem of designing a custom bike rack for the Elise that would be secure and safe. Using the drawings from the Elise workshop manual and working closely with the Lotus factory, they investigated how best to mount the rack. From that point, they designed a frame to which existing bike rack components and accessories could be mounted.

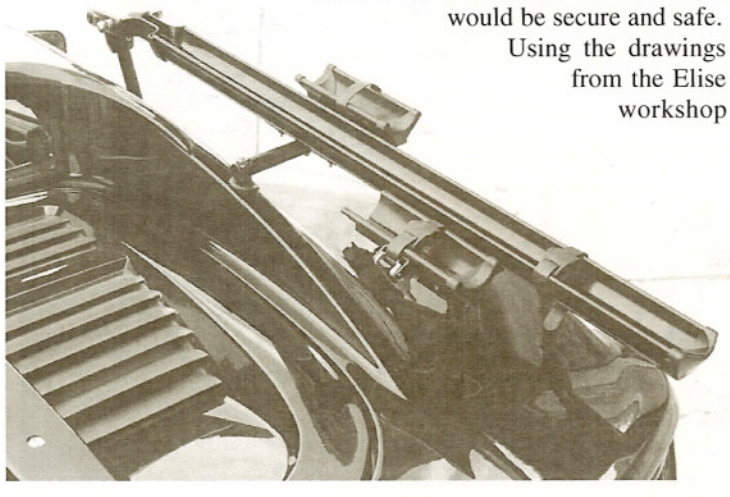

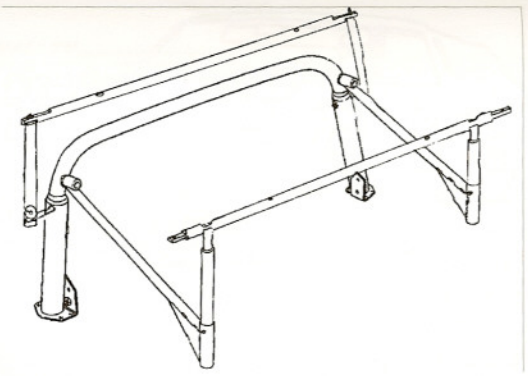

The result is the Unique Rack, which is solidly mounted to the Elise at two points. At the front, a hole is drilled into the fiberglass body behind the window to gain access to the seat belt mounting tube, which already exists as a welded member of the roll bar. This tube is tapped to accept a treaded stud for the horizontal bar of the rack frame. At the rear, another hole is drilled roughly half way back along the top of the "sail" to access a vertical steel tube, which is part of the car's roll bar reinforcing frame. After cross-drilling a ¼" hole, the vertical rear member of the rack frame drops into this tube, and is held in place with a bolt and nut.

The raw edges of the holes in the bodywork are protected with rubber grommets, which also prevents water from entering at the front. If the rack needs to be removed, black plastic caps fit into the grommets to close off the holes. A second rack can be similarly mounted on the opposite side for greater cargo carrying capacity. In addition, by adding two available cross members to tie the two together, a strong mount is provided for standard rack accessories from major manufacturers such as Thule and Yakima for carrying bulkier cargo such as luggage, surf boards, sail boards, kayaks, or racing tires.

The components for the Unique Rack frame are manufactured at Cooper Technica, which has full machine shop capabilities. Fabricated from 7075 aluminum, they are powder coated for corrosion protection and appearance. The fasteners and structural parts are steel. The rack is designed to provide easy access to the engine compartment, and is easily removable if necessary.

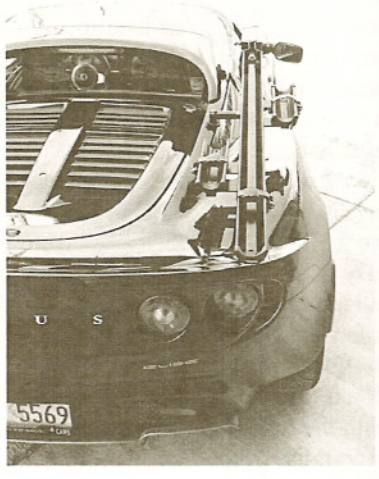

Further information about the Unique Rack can be found on their web site: *wwww.uniquerack.com*, or call Terry Clark at (312)842-5169. See also the Cooper Technica web site at: *www.coopertechnica.com* or call David Cooper at (312)440-0711.

Lotus Notus

MONTHLY NEWSLETTER OF THE LOTUS CORPS **NOVEMBER 2005**

End of the Trail. Colleen Dreher and Luann Sarro confer while at the Broughton Sheboygan Marsh, end point of the Kettle Moraine Scenic Drive.

LOTUS CORPS CHRISTMAS PARTY

December 10th - Doug and Donna Alexander, Barrington, Illinois

Fall has come and gone, the first winter snow has fallen, and the Holidays are quickly approaching. That means it's time for the *Lotus Corps Christmas Party*. We have been invited to gather at Doug and Donna Alexander's home in Barrington for this year's event. Come in your best festive mood and ring in the season right with great food and beverages, singing of the Lotus Corps Christmas Carol, playing the Australian Pursuit Grab Bag, and socializing with your Lotus Corps friends. Each person who would like to participate in the Australian Pursuit Grab Bag will need to bring an anonymously wrapped gift, valued at about $15. Festivities will begin at 7:00 PM. Please remember to RSVP Doug or Donna at (847)382-2460, or E-mail at: *dougalex@ameriteh.net.*

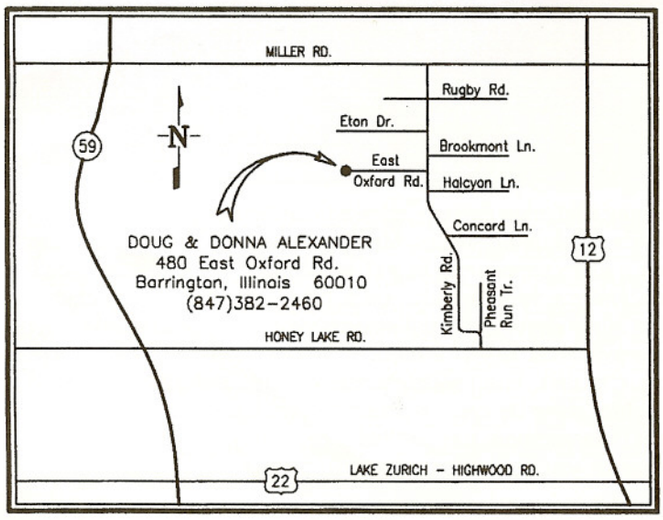

LOTUS CORPS MEMBERSHIP RECOGNITION AND AWARDS BANQUET

January 28th - Mill Rose Restaurant and Brewing Company, South Barrington, Illinois

Reserve this date and join us for the *Membership Recognition and Awards Banquet*. It will be held at a new venue, the Mill Rose Restaurant and Brewing Company, which is located on Barrington Road, just north of the Northwest Tollway (I-90). Reservation forms will be mailed with the membership renewal notices towards the end of December. More information to follow.

ALL BRITISH CAR SWAP MEET and AUTOJUMBLE

February 26th - DuPage County Fairgrounds, Wheaton, Illinois

Over 100 vendors selling tons of British car parts, accessories, shop manuals, and memorabilia. Lotus Corps will once again have a booth at the show. The show runs from 8 AM to 3 PM, admission is $5, children 12 and under are free, and free parking. Visit: *www.britishcarswap.info*. Contact Jim Evans at (630)858-8192 or Dave Mullis at (630)916-7358, or e-mail at: *swapmeet@chicagolandmgclub.com.*

For additional information concerning any Lotus Corps event, contact the Activities Chairman: Rick Waller at (630)595-1299, evenings or e-mail: opie@ameritech.net